INDIAN INSTITUTE OF TECHNOLOGY MADRAS

Department of Electrical Engineering

Internship Report

on

Entanglement Characterisation

Submitted by

K JYOTHSNA

Reg. No: 23ECB0F01

B.Tech ECE, NITW-'27

Under the Guidance of

Dr. Anil Prabhakar

Professor

Internship carried out at

IITM CDOT SAMGNYA TECHNOLOGIES FOUNDATION AND CQuICC

May 2025 – July 2025

Acknowledgment

I would like to express my heartfelt gratitude to **Prof. Anil Prabhakar** for providing me the opportunity to carry out this internship under his guidance at IITM CDOT SAMGNYA TECHNOLOGIES FOUNDATION and CQuICC.

I also thank my mentor, Mr. Ashutosh Singh, lab members, and fellow interns who supported and guided me throughout the project.

– **Jyothsna Padma Kandarpa**

Contents

1 Introduction **5**

2 Theory **7**

2.1 How Are Entangled Photons Generated? 7
2.2 Quasi-Phase Matching 8
2.3 Pure and Mixed States 9
2.4 Composite Systems and Separability 9
2.5 Measurement of Entanglement 10
2.6 Bell's Inequality and CHSH Violation 11

3 Understanding Components **15**

3.1 Types of Fibres and Connectors 15
3.2 Splicing 16
3.3 Polarising Beam Splitter (PBS) 16
3.4 Broadband PPSF Entangled Photon Source 17
3.5 Superconducting Nanowire Single-Photon Detectors 17
3.6 Photodiodes 18
3.7 Motorised Polarisation Controller 18

4 Experiments **19**

4.1 PBS Characterisation 19
4.2 OOK Setup 21
4.3 Polarisation Optimisation with MPC 23

5 Future Work: Entanglement Characterisation **27**

Chapter 1

Introduction

Quantum technologies are reshaping the landscape of secure communication, computation, and sensing, with entangled photons forming a fundamental resource for many such applications. This internship project focused on the broad theme of **entanglement characterisation**.

The project began with developing a theoretical foundation covering the mechanisms behind entangled photon generation—particularly **spontaneous parametric down-conversion (SPDC)**—and associated phenomena such as quasi-phase matching, squeezed light, and the role of photonic crystals. Theoretical concepts such as density matrices, purity, Bell inequalities, and CHSH violations were also studied in depth to understand how quantum correlations manifest and how they can be experimentally verified.

This theoretical background directly supported the experimental goals of the internship. The initial phase involved component-level characterisation—examining fibre-based **polarising beam splitters (PBS)**, learning to perform fibre splicing using the Fujikura 88S+, and validating detector components such as **InGaAs photodiodes**. A crucial part of the work was the design and implementation of an **OOK setup in free-space optics**, using an Arduino-controlled laser source and a transimpedance amplifier (TIA) designed for signal reception.

The core experimental effort was centred around **polarisation control**, essential for managing and analysing entangled states. A **motorised polarisation controller** was integrated into the setup, and automated paddle angle optimisation was implemented using **Powell's method**—a gradient-free algorithm ideal for noisy, non-linear systems. This allowed fine-tuning of the polarisation state at the output of the PBS to maximise detection signal, a critical step in aligning photon states for interference-based quantum measurements.

The theoretical insights gained and the experimental groundwork laid during this internship form the basis for the next phase of the project: the implementation of a **Bell test** and full **entanglement characterisation**. These will validate non-classical correlations and quantify entanglement using tools such as CHSH inequality violation and purity analysis. Overall, this internship has provided a well-rounded preparation for rigorous quantum optics experimentation, directly linking theoretical knowledge to hands-on system implementation.

Chapter 2

Theory

A considerable amount of literature review and learning occurred during the course of the internship. Here is a summary of the different topics covered during the internship. This learning was essential to understanding the core functioning of many pieces of equipment and processes.

2.1 How Are Entangled Photons Generated?

To generate a pair of entangled photons, we employ a method known as **Spontaneous Parametric Down-Conversion (SPDC)**. In SPDC, a high-energy photon with wavelength λ is passed through a nonlinear crystal. This results in the generation of two lower-energy photons, each with a wavelength approximately 2λ, emitted in different directions such that energy and momentum stay conserved.

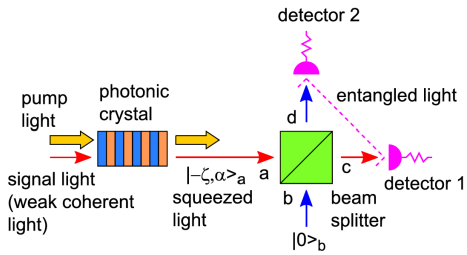

Figure 2.1: Generation of Entangled Photons[2]

A beam splitter is often used in the setup to spatially separate the generated photon pair. In many practical SPDC systems, one of the generated photons is used as a **heralding signal**—that is, its detection confirms the presence and readiness of the other photon for use. This heralding process makes SPDC a reliable method for deterministic single-photon sources.

A key component in this setup is a **one-dimensional photonic crystal** composed of a material with a high second-order nonlinear optical susceptibility ($\chi^{(2)}$). This structure transforms coherent incident light into a special quantum state known as **squeezed light**[2].

What is squeezed light?
Squeezed light is a non-classical state of light in which the quantum uncertainty in one of the field quadratures (amplitude or phase) is reduced below the standard quantum limit, at the expense of increased uncertainty in the conjugate quadrature. This is a direct consequence of the Heisenberg uncertainty principle.

Why do we use squeezed light here?
The use of squeezed light enhances photon–photon interactions in nonlinear media, thereby enabling highly efficient generation of entangled photon pairs after passing through a beam splitter. The squeezing reduces noise in one dimension of the light field, making quantum effects such as entanglement more pronounced and easier to detect.

In summary, SPDC combined with photonic crystals and squeezed light provides a practical and efficient method for generating entangled photon pairs for use in quantum communication, quantum optics, and photonic quantum computing.

2.2 Quasi-Phase Matching

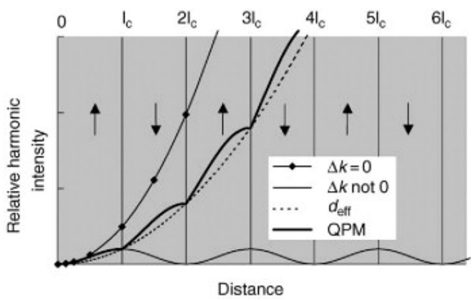

Figure 2.2: Periodic Poling in PPLN for Quasi-Phase Matching

Quasi-phase matching (QPM) is a technique used to enhance the efficiency of nonlinear optical processes such as **sum-frequency generation (SFG)** or **second harmonic generation (SHG)**. In a typical nonlinear crystal, destructive interference between generated and input waves limits conversion efficiency.

To overcome this, the crystal's nonlinear polarity is flipped every **coherence length**—the distance over which the generated wave stays in phase with the interacting input waves so their amplitudes add constructively. By reversing the phase of the generated wave periodically, QPM converts what would have been destructive interference into constructive interference, thereby enhancing the nonlinear process.

Periodically Poled Lithium Niobate (PPLN) crystals are widely used for QPM. They enable precise periodic poling, exhibit high nonlinear coefficients, and are effective over a broad range of wavelengths, making them ideal for quantum optics and entangled photon generation experiments.

2.3 Pure and Mixed States

In quantum mechanics, the distinction between pure and mixed states is fundamental. A **pure state** is described by a single ket vector $|\psi\rangle$, and its associated density matrix ρ satisfies the following properties:

$$\rho^2 = \rho \quad \text{and} \quad \mathrm{Tr}(\rho^2) = 1.$$

On the other hand, a **mixed state** represents a statistical ensemble of pure states and is expressed as:

$$\rho = \sum_i p_i |\psi_i\rangle\langle\psi_i|,$$

where the probabilities satisfy $\sum_i p_i = 1$ and $0 < p_i < 1$. For mixed states, the trace of the square of the density matrix satisfies [4]:

$$\mathrm{Tr}(\rho^2) < 1.$$

2.4 Composite Systems and Separability

Composite quantum systems are mathematically described by the tensor product of individual subsystems. For two subsystems A and B, the combined state is represented as:

$$|\psi\rangle_{AB} = |\psi\rangle_A \otimes |\psi\rangle_B$$

This expression defines a **separable state**, where the overall state of the system can be written as a product of the individual states of the subsystems.

In contrast, an **entangled state** cannot be written in this product form. Instead, the state of one subsystem is intrinsically correlated with the state of the other, such that measurement outcomes in one affect the probabilities in the other. These correlations are fundamental to quantum mechanics and have no classical counterpart [4].

2.5 Measurement of Entanglement

The degree of entanglement is determined using the trace of the square of ρ_A, denoted $\mathrm{Tr}(\rho_A^2)$.

For a bipartite quantum system AB, described by a joint density matrix ρ_{AB}, we define the **trace** and **partial trace** as follows:

- **Trace (Tr)**: The trace of a square matrix is the sum of its diagonal elements. For a density matrix ρ, the trace is:

  $$\mathrm{Tr}(\rho) = \sum_i \rho_{ii}$$

  For any valid density matrix, $\mathrm{Tr}(\rho) = 1$, ensuring the total probability is conserved.

- **Partial Trace ($\mathbf{Tr}_B$)**: Given a composite system AB with density matrix ρ_{AB}, the reduced density matrix for subsystem A is obtained by tracing out the degrees of freedom associated with subsystem B:

  $$\rho_A = \mathrm{Tr}_B(\rho_{AB})$$

  This operation yields the density matrix describing subsystem A alone.

The **purity** of the reduced density matrix is defined as:

$$\text{Purity} = \mathrm{Tr}(\rho_A^2)$$

The value lies in the range:

$$\frac{1}{d} \leq \mathrm{Tr}(\rho_A^2) \leq 1 \tag{2.1}$$

Here, d is the dimension of the subsystem. For a two-level system (qubit), $d = 2$, so the inequality becomes:

$$\frac{1}{2} \leq \mathrm{Tr}(\rho_A^2) \leq 1$$

- **Zero Entanglement (Pure State):**

$$\mathrm{Tr}(\rho_A^2) = 1$$

  This indicates the subsystem is in a pure state and not entangled with the other subsystem.

- **Maximum Entanglement (Mixed State):**

$$\mathrm{Tr}(\rho_A^2) = \frac{1}{2}$$

  This corresponds to a maximally mixed state of the subsystem, implying maximal entanglement with the rest of the system [4].

The closer $\mathrm{Tr}(\rho_A^2)$ is to $\frac{1}{d}$, the greater the entanglement. Conversely, values closer to 1 indicate that the state is nearly separable.

2.6 Bell's Inequality and CHSH Violation

Bell's inequality is a foundational result in quantum mechanics that distinguishes classical local hidden variable theories from quantum predictions. It demonstrates that certain correlations predicted by quantum mechanics cannot be explained by any theory that preserves both **locality** and **realism**.

- **Locality** refers to the principle that an object is directly influenced only by its immediate surroundings. In the context of a bipartite quantum system, this means that measurements performed on one subsystem cannot instantaneously affect the outcomes on the other, spatially separated subsystem.

- **Realism** is the belief that physical properties of particles exist independently of measurement — that is, the results of measurements reflect pre-existing values determined by hidden variables.

In deriving Bell's inequality, it is assumed that the outcomes of measurements on entangled particles are governed by hidden variables λ, and that these outcomes are independent of the choice of measurement basis at the distant location (locality). Under these assumptions, one arrives at constraints — such as the CHSH inequality — that place

bounds on the strength of correlations between measurement outcomes.

However, quantum mechanics predicts correlations that *violate* these classical bounds. This implies that at least one of the underlying assumptions must be invalid. The violation of Bell's inequality leads to the following conclusions:

- Either **locality** must be abandoned — allowing for non-local influences between distant events (though not necessarily faster-than-light communication),
- Or **realism** must be relaxed — accepting that measurement outcomes are not determined until the act of measurement,
- Or both assumptions must be reconsidered.

Most interpretations of quantum mechanics (such as the Copenhagen interpretation) accept the relaxation of realism, emphasizing that the act of measurement plays a central role in determining outcomes. Other interpretations, like Bohmian mechanics, preserve realism but introduce explicit non-locality.

The Bell's inequality does not just test quantum predictions — it forces a re-evaluation of our classical intuitions about the nature of reality and causality.

Consider two distant observers, Alice and Bob, who each measure a spin-$\frac{1}{2}$ particle. They have two measurement settings each: A, A' for Alice and B, B' for Bob, with outcomes ± 1.

Classically, the expectation value of the combination

$$S = \langle AB \rangle + \langle A'B \rangle + \langle AB' \rangle - \langle A'B' \rangle$$

must satisfy the Bell–CHSH inequality:

$$|S| \leq 2$$

Quantum Mechanical Violation In quantum mechanics, measurements are represented by Hermitian operators, and the above expression becomes:

$$S_Q = \langle \psi | \hat{A} \otimes \hat{B} + \hat{A}' \otimes \hat{B} + \hat{A} \otimes \hat{B}' - \hat{A}' \otimes \hat{B}' | \psi \rangle$$

For certain entangled states such as the Bell state:

$$|\phi_0\rangle = \frac{1}{\sqrt{2}} \left(|+\rangle_A \otimes |+\rangle_B + |-\rangle_A \otimes |-\rangle_B \right)$$

and appropriate choices of measurement angles, quantum mechanics predicts:

$$|S_Q| = 2\sqrt{2}$$

This result exceeds the classical bound and is known as **Tsirelson's bound**, the maximal quantum violation.

Physical Significance The violation of Bell's inequality shows that quantum entanglement produces correlations that cannot be mimicked by any local hidden variable model. This result was experimentally verified in the 1980s by Alain Aspect and later confirmed with loophole-free tests.

Experimental Verification A significant milestone in testing Bell's inequality was achieved by Alain Aspect and his colleagues in 1982. In this experiment, pairs of polarisation-entangled photons were emitted from a calcium cascade source. The measurement apparatus consisted of two polarising cubes, each connected to two photomultiplier tubes, effectively implementing a true dichotomic measurement system.

Aspect used a four-channel coincidence setup to directly measure the four required correlations $\langle AB\rangle, \langle A'B\rangle, \langle AB'\rangle, \langle A'B'\rangle$. The results yielded:

$$S_{\text{exp}} = 2.697 \pm 0.015$$

This value is in strong agreement with quantum mechanical predictions and represents about 83% of the theoretical maximum violation. The experimental setup eliminated many loopholes found in earlier attempts, such as low detector efficiency or the use of single-channel polarisers. Moreover, the measurements were performed under symmetric and well-controlled conditions, ensuring that the detected sample accurately represented the entire ensemble of emitted pairs.

Bell's inequality and its quantum mechanical violation, especially as demonstrated by the Aspect experiment, provide compelling evidence against local hidden variable theories. These results highlight the inherently nonlocal nature of quantum entanglement and have profound implications for the development of quantum technologies such as quantum cryptography, teleportation, and computation[1].

Conditions for Violation For violation to occur:
- The quantum state must be entangled.
- The measurement operators on each side must not commute. - The systems must be space-like separated to enforce locality[3].

Chapter 3

Understanding Components

3.1 Types of Fibres and Connectors

Optical fibre connectors are used to align and join fibre ends precisely, allowing efficient optical signal transmission. They vary in terms of physical design, locking mechanism, and end-face polish.

The most common connector types include:

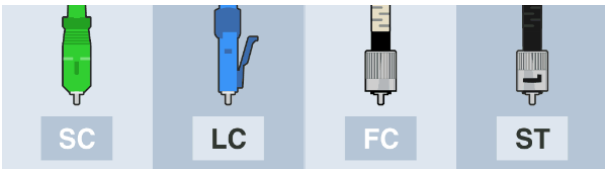

Figure 3.1: Common fibre connectors

In fibre optic communication systems, various connector types are used based on application and design considerations. The **FC (Ferrule Connector)** employs a threaded screw-on mechanism, offering excellent mechanical stability, making it suitable for environments with significant vibrations or lab-based testing setups. The **SC (Subscriber Connector)** features a square form factor and a push-pull coupling, enabling quick connections and disconnections; hence it is commonly found in telecommunications and structured cabling systems. The **LC (Lucent Connector)** is a compact connector with a latch-style mechanism, making it particularly effective in dense network environments such as data centres. Meanwhile, the **ST (Straight Tip)** connector utilises a twist-lock bayonet-style mechanism and has been widely adopted in older multimode fibre installations and legacy LANs.

In addition to connector geometry, the fibre end-face polish also plays a crucial role in performance. A **PC (Physical Contact)** polish slightly curves the fibre tip to ensure

consistent physical contact, minimising air gaps and insertion loss; connectors like FC/PC are often found in standard laboratory setups. An upgraded version, known as **UPC (Ultra Physical Contact)**, improves the surface finish for lower return loss and is widely adopted in digital communication links, such as SC/UPC connectors. For applications demanding minimal back-reflection, **APC (Angled Physical Contact)** connectors are used, where the fibre end-face is polished at an 8° angle. This angled finish helps reduce back-reflection to typically below −65 dB, making APC connectors (e.g., LC/APC) suitable for high-precision analogue systems, CATV networks, and FTTx deployments.

3.2 Splicing

The Fujikura 88S+ fusion splicer uses an advanced core alignment splicing method that ensures low-loss and highly reliable optical fibre joints. It begins with precise fibre placement using V-grooves, followed by active core alignment driven by high-resolution cameras and stepper motors.

Key technologies include: (1) **Active Fusion Control**, which automatically adjusts arc parameters in real-time based on cleave quality and arc brightness. (2) **Fibre Type Discrimination**, which detects the type of fibre (e.g., G.652 or G.657) and applies optimised splicing parameters. (3) **Active Blade Management**, which, when paired with the CT50 cleaver, enables automatic blade rotation and height adjustment to maintain cleave quality.

The splicing process includes clamping fibres, aligning cores, applying a controlled fusion arc (typically 7–9 seconds), transferring fibres to the heater, and shrinking the protection sleeve (heating time around 9–10 seconds for a 60 mm sleeve). The machine automates wind protector and clamp movements, reducing manual steps. Splice losses are minimised, with an average of about 0.02 dB for G.652 fibres. The electrode life extends up to 5000 splices, and the system supports Bluetooth connectivity for smart control.

3.3 Polarising Beam Splitter (PBS)

Fibre-based polarising beam splitters (PBS) are compact optical components designed to divide an incoming light beam into two orthogonal polarisation components, typically transmitting one polarisation state (e.g., horizontal) and reflecting the orthogonal state (e.g., vertical). These fibre-coupled PBS devices are widely used in applications requiring polarisation management, such as interferometry, quantum optics, and coherent optical systems.

In the configuration I worked with, the PBS was specifically designed to **rotate the polarisation** of one of the output ports before the signal exits. This feature ensures that both output arms deliver light with the **same polarisation state**, which is essential in interference experiments where polarisation mismatches can significantly reduce fringe visibility. Importantly, this rotation is not a fixed characteristic—it can be **modified by the manufacturer** upon request, depending on the experimental requirements.

3.4 Broadband PPSF Entangled Photon Source

The entangled photon source used in this project is based on a periodically-poled silica fibre (PPSF), which is already available in the lab. PPSF enables efficient generation of broadband polarisation-entangled photon pairs via spontaneous four-wave mixing (SFWM). Its fibre-based nature ensures better integration into fibre-based optical systems.

3.5 Superconducting Nanowire Single-Photon Detectors

A Superconducting Nanowire Single-Photon Detector (SNSPD) is an advanced photodetector designed to detect individual photons with remarkable sensitivity, low noise, and high timing precision. The detector comprises a narrow and ultrathin superconducting nanowire, typically fabricated from materials such as niobium nitride (NbN) or tungsten silicide (WSi), and is operated at cryogenic temperatures below its superconducting transition temperature.

When biased just below its critical current, the nanowire remains in a superconducting state. Upon absorption of a single photon, a localised *hotspot* forms, where superconductivity is temporarily suppressed. This leads to the emergence of a resistive section in the wire. Consequently, the bias current goes around the resistive zone, generating a measurable voltage pulse across the device. Shortly after, the nanowire cools down and returns to its superconducting state, making it ready for the detection of the next photon. SNSPDs offer high performance in terms of:

- Detection efficiency exceeding 98%,
- Extremely low dark count rates,
- Timing jitter on the order of tens of picoseconds,
- Broad spectral sensitivity, ranging from the visible to the mid-infrared [5]

.

3.6 Photodiodes

Indium Gallium Arsenide (InGaAs) photodiodes are widely used in optical communication systems due to their excellent performance in the near-infrared spectrum. These devices operate based on the principle of the photovoltaic effect within a PIN (p-type, intrinsic, n-type) semiconductor structure, where incident photons generate electron-hole pairs in the intrinsic region, and an electric field drives the carriers to produce a measurable photocurrent.

The particular device used has a planar GaInAs/InP structure, optimised to achieve high responsivity over a broad wavelength range of 1250 to 1600 nm. It is engineered for high-speed applications, with a 3 dB bandwidth of either 10 GHz or 20 GHz, making it suitable for both digital and analogue high-bandwidth systems. The device exhibits low dark current and low capacitance, contributing to enhanced sensitivity and fast response times.

3.7 Motorised Polarisation Controller

The Thorlabs three-paddle polarisation controller (e.g., PMC320) is a fibre-based device designed to manipulate the polarisation state of light transmitted through an optical fibre. It employs a configuration functionally equivalent to a sequence of a quarter-wave plate (QWP), a half-wave plate (HWP), and a second QWP. The first paddle introduces a quarter-wave retardation that converts any input polarisation to a linear state. The middle paddle acts as a half-wave plate, rotating the linear polarisation to the desired orientation. Finally, the third paddle, functioning as another QWP, converts this rotated linear polarisation to the desired elliptical or circular output polarisation. Each paddle independently stresses and rotates the fibre, introducing controlled birefringence, which enables full polarisation control.

The device typically covers a broad wavelength range from 300 nm to 2100 nm, making it versatile for various applications, including quantum optics and fibre-based communication systems. The controller features a three-loop design where each loop primarily introduces polarisation modulation in a direction parallel to the linear polarisation equator on the Poincaré sphere, allowing precise and continuous polarisation adjustment.

Chapter 4

Experiments

4.1 PBS Characterisation

Fibre-Based PBS: The laser, emitting light with a power of 5 dBm, is fed to port P13, which is aligned along the slow and fast axes. The power at P11 is 4.5 dBm (aligned with the slow axis), and the power at P12 is −18 dBm (also along the slow axis). Thus, the output polarisation at both P11 and P12 is aligned with the slow axis.

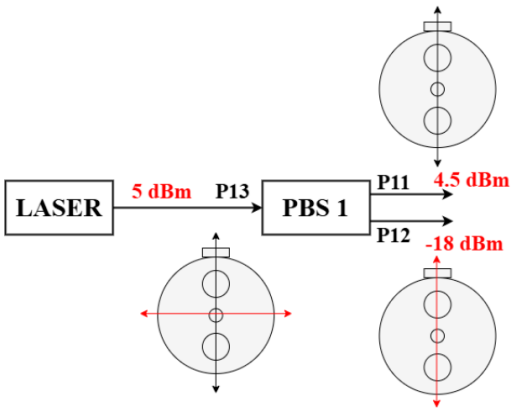

Figure 4.1: Slow axis is aligned with the key. Light along the slow axis is shown in black and light along the fast axis is shown in red.

Changing Output Polarisation Axis: Slow to Fast: The output from P11, aligned with the slow axis, is fed into P22, corresponding to the fast axis of P23. A power level of 3 dBm is observed at port P23, which confirms alignment with the fast axis. Hence, the slow axis output is effectively reoriented to the fast axis.

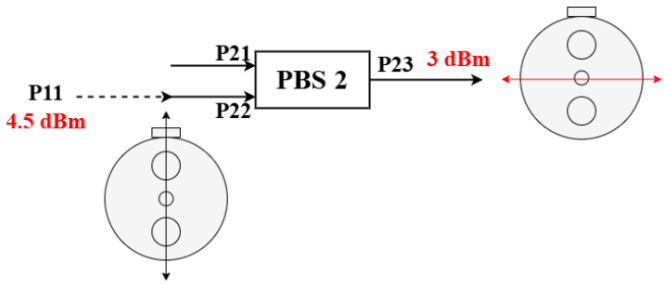

Figure 4.2: Changing output polarisation axis: Slow to Fast.

Fast Axis Validation: To validate whether the output from PBS 2 is indeed aligned along the fast axis, the signal is fed into P33 of PBS 3. The output observed at P32 (fast axis of PBS 3) measures 2 dBm, confirming that the polarisation is aligned with the fast axis.

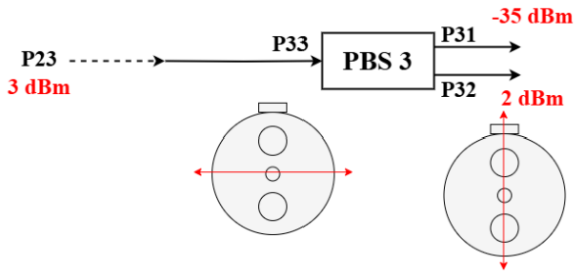

Figure 4.3: Fast axis validation.

Fast Axis Blocking Validation: PBS 4 is used to confirm that light along the fast axis is blocked. The output from P23 (aligned with the fast axis) is fed into P42 of PBS 4. The output power measured at P43 is approximately -21 dBm, confirming successful blocking of the fast axis.

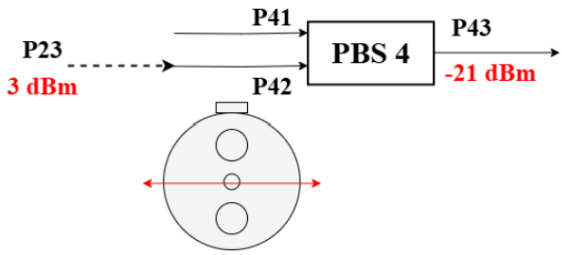

Figure 4.4: Fast axis blocking validation.

4.2 OOK Setup

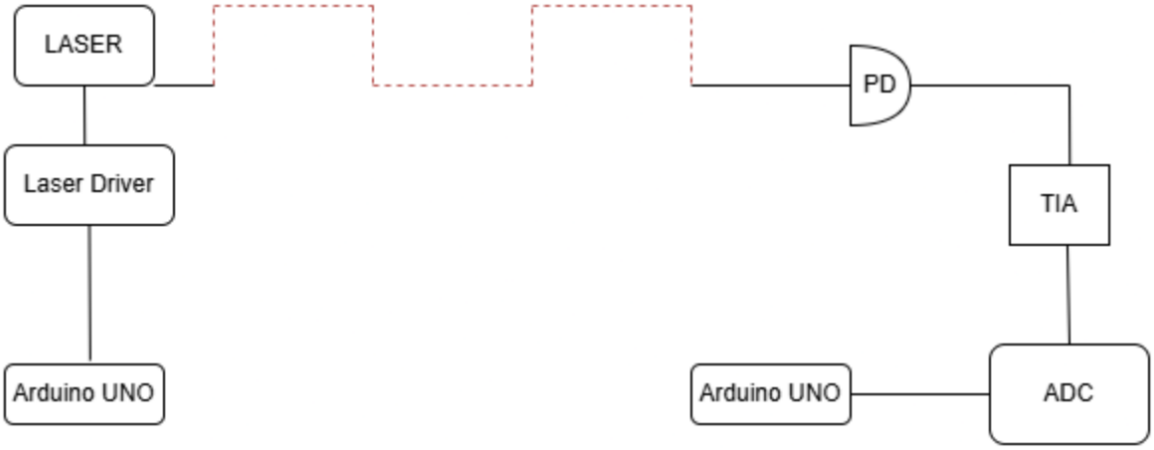

Figure 4.5: OOK setup.

The experimental setup for On-Off Keying (OOK) modulation comprised a transmitter–receiver system built using an Arduino, a laser diode, and a photodetector with transimpedance amplification.

Transmitter Side: An Arduino UNO was used to transmit a binary bitstream (e.g., `101011`) using pulse width modulation (PWM). A laser driver circuit was designed to maintain a stable laser diode current of 39.8 mA using a 100 Ω current sense resistor. A voltage divider provided the reference voltage to precisely control the current.

Laser Driver Design: The driver uses a feedback loop involving an op-amp and an NPN BJT. The op-amp output controls the BJT to regulate the current through the laser diode. The reference voltage across the sense resistor defines the operating current, ensuring the laser stays within its safe operating range of 30–50 mA.

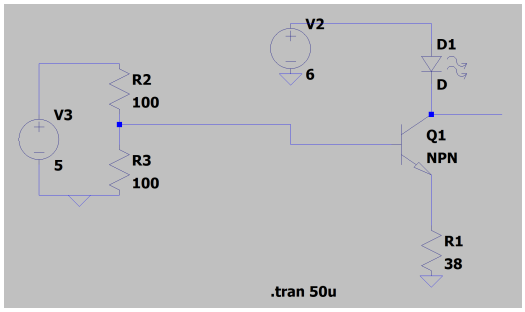

Figure 4.6: Laser driver circuit with op-amp and BJT.

Receiver Side: A silicon photodiode detects incoming light pulses. A two-stage amplifier converts the photocurrent into a usable voltage. The first stage is a transimpedance amplifier (TIA) using an OP777 op-amp, a 100 Ω feedback resistor, and a 5 pF capacitor for stability. Since the TIA output is inverted, a second op-amp stage re-inverts the signal, producing a positive voltage suitable

for Arduino ADC input. Initial LTSpice simulations used an OP07 op-amp, which caused instability due to poor high-frequency performance. **Transimpedance Amplifier Design:** The TIA converts photocurrent (I_{photo}) into voltage:

$$V_{\text{out}} = -I_{\text{photo}} \cdot R_f$$

Here, $R_f = 100\ \Omega$. A 5 pF capacitor across the feedback resistor ensures high-frequency stability. The inverted output is re-inverted using a second op-amp stage.

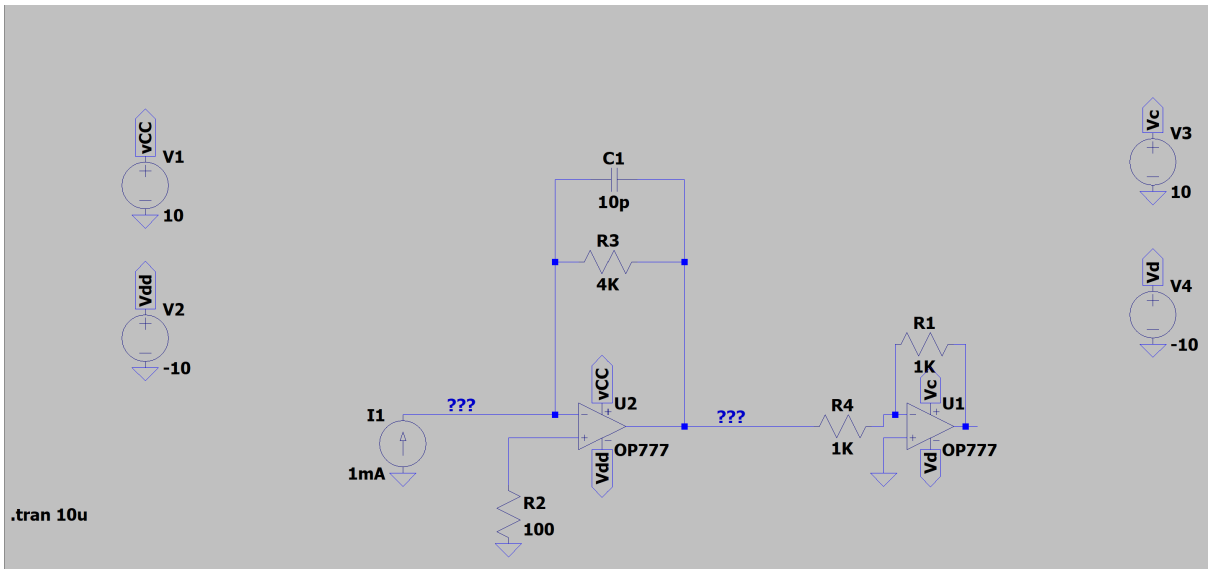

Figure 4.7: Transimpedance amplifier and second-stage inverter.

PWM and Arduino: Arduino's PWM outputs modulated the laser signal. Pins 3, 9, 10, and 11 produce PWM at 490 Hz, while pins 5 and 6 operate at 980 Hz. The duty cycle was controlled via the `analogWrite()` function, with values from 0 to 255 representing the high-state percentage.

4.3 Polarisation Optimisation with MPC

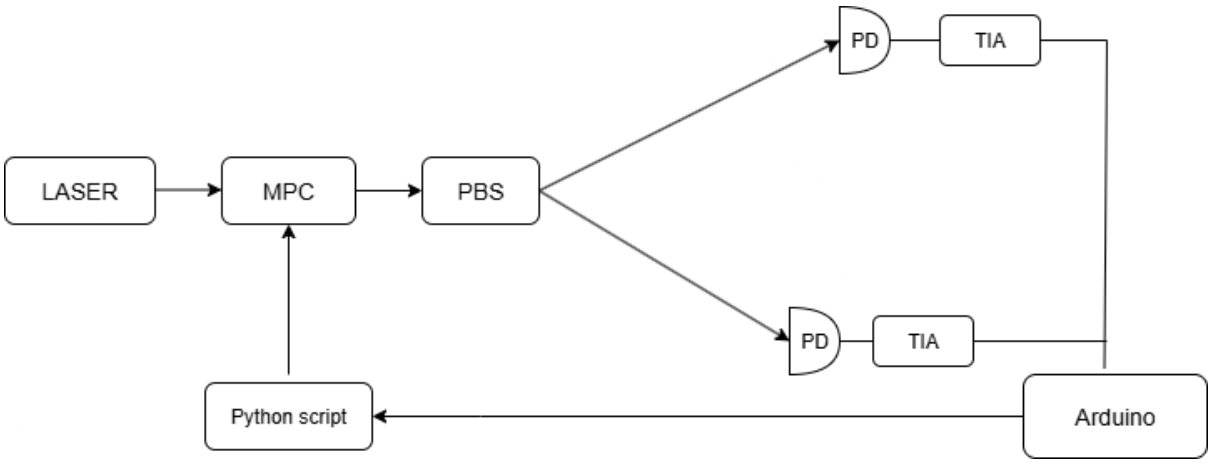

Figure 4.8: Motorised polarisation controller (MPC320) setup.

This part of the project focused on optimising the polarisation state using the MPC320 motorised polarisation controller. The objective was to maximise optical power at a desired PBS output port by adjusting paddle angles.

The MPC was successfully installed and calibrated. Initial paddle angles were $(10°, 10°, 10°)$ for paddles 1, 2, and 3. Python scripts were developed to automate optimisation, beginning from this fixed point. A TIA circuit was used to convert photodiode current to voltage for Arduino ADC input.

The optimization process employed **Powell's method**, a gradient-free optimization algorithm particularly well-suited for systems where the objective function is nonlinear, noisy, or lacks an analytically tractable derivative. In experimental setups — such as polarization control using a motorized paddle controller — the response surface can be complex and susceptible to measurement noise, making derivative-based techniques unreliable.

Powell's method addresses this challenge by performing a sequence of *line minimizations* along a set of conjugate directions. Starting from an initial point and direction set, the algorithm proceeds by minimizing the objective function one direction at a time. After completing a cycle of minimizations along all directions, it updates the set of directions based on observed improvements in function value.

This iterative refinement enables Powell's method to efficiently converge toward local minima, even in the absence of gradient information. Its robustness and simplicity make it ideal for real-world control tasks where system dynamics are not easily modeled.

In our setup, this method was used to fine-tune the angles of the polarization paddles

in order to maximize optical power output at a chosen port of the polarization beam splitter (PBS). The use of Powell's algorithm allowed for reliable convergence without requiring gradient estimation, ensuring optimal performance under noisy and nonlinear experimental conditions.

This method was effective in our system, where paddle angle–power relationships are highly nonlinear and fluctuating. Integration of Powell's algorithm into the control loop enabled consistent tuning of the polarisation state to maximise PBS output intensity.

Optimisation Results

Port 1:

- Optimized Power: -4.575
- Paddle Angles:
  - Paddle 1: $13.236°$
  - Paddle 2: $9.983°$
  - Paddle 3: $10.433°$
- Function Evaluations: 44

Port 2:

- Optimized Power: -4.790
- Paddle Angles:
  - Paddle 1: $11.000°$
  - Paddle 2: $11.000°$
  - Paddle 3: $12.000°$
- Function Evaluations: 37

Port 3:

- Optimized Power: 0.010
- Paddle Angles:
  - Paddle 1: 17.849°
  - Paddle 2: 37.689°
  - Paddle 3: 8.264°
- Function Evaluations: 205

These results validate the functionality of the motorised controller and highlight the effectiveness of Powell's method in optimizing the polarization state to achieve maximal output from specific ports of the PBS. The differences in optimized paddle angles and corresponding power values across the three ports demonstrate the sensitivity and tunability of the system.

Chapter 5

Future Work: Entanglement Characterisation

The next phase involves characterising polarisation entanglement through a Bell test experiment. Building on prior work in polarisation control, signal detection, and circuit design, the aim is to demonstrate entanglement by observing violation of the CHSH form of Bell's inequality.

Entangled Photon Source

The entangled source is based on a broadband PPSF (periodically poled silica fibre), available in the lab. Entangled photon pairs are generated via spontaneous four-wave mixing (SFWM) and separated into signal and idler arms using a programmable Waveshaper.

Single-Photon Detection

Each arm is connected to a Superconducting Nanowire Single-Photon Detector (SNSPD) with:

- High quantum efficiency at 1550 nm,
- Extremely low dark count rates,
- Picosecond-scale timing resolution.

Coincidence Counting and Timing Synchronisation

The SNSPD outputs are fed into a time tagger or coincidence counter to detect simultaneous events. A narrow coincidence window reduces background noise. Coincidence-to-Accidental Ratio (CAR) is calculated as:

$$\text{CAR} = \frac{\text{Coincidence counts in main peak}}{\text{Accidental counts in side windows}}$$

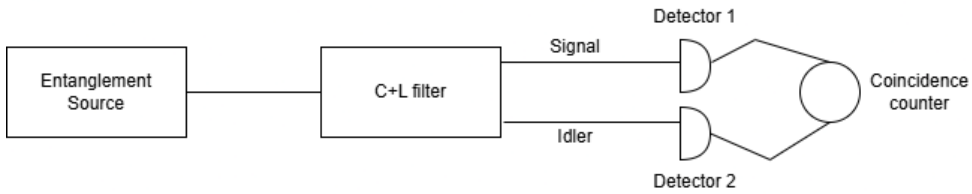

Figure 5.1: Coincidence measurement using time-tagging electronics.

Polarisation Analyser and Visibility Measurements

Motorised polarisation controllers (MPCs) will rotate polarisation in signal and idler arms. The setup includes:

- Polarising beam splitters (PBS) as analysers,
- Delay lines to compensate temporal mismatch,
- Spectral tuning via Waveshaper for higher visibility.

Visibility will be measured in H/V and A/D bases:

$$\text{Visibility} = \frac{C_{\max} - C_{\min}}{C_{\max} + C_{\min}}$$

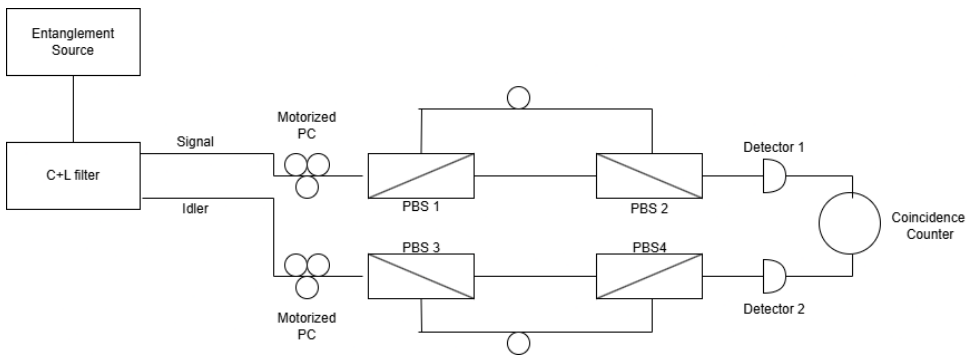

Figure 5.2: Visibility measurement setup with delay and recombination.

Bell Test and CHSH Inequality Violation

The CHSH Bell test involves measuring correlation at four angle settings:

$$(\vec{a}, \vec{b}),\ (\vec{a}, \vec{b'}),\ (\vec{a'}, \vec{b}),\ (\vec{a'}, \vec{b'})$$

where:

- Signal: $\vec{a} = 0°,\ \vec{a'} = 45°$
- Idler: $\vec{b} = 22.5°,\ \vec{b'} = 67.5°$

The correlation function is:

$$E = \frac{N_{++} + N_{--} - N_{+-} - N_{-+}}{N_{++} + N_{--} + N_{+-} + N_{-+}}$$

The CHSH parameter is:

$$S = |E(\vec{a}, \vec{b}) - E(\vec{a}, \vec{b'}) + E(\vec{a'}, \vec{b}) + E(\vec{a'}, \vec{b'})|$$

Quantum mechanics predicts $S > 2$; the theoretical maximum is 2.828 for maximally entangled states. A measured violation confirms entanglement and rules out local realism.

Expected Outcomes

- Coincidence histograms with narrow, well-defined peaks,
- High CAR values indicating strong signal-to-noise ratios,
- High visibility in both H/V and A/D measurement bases,
- CHSH parameter $S > 2$, confirming violation of Bell's inequality.

This experiment will complete the characterisation of entangled states, paving the way for further work in quantum key distribution, teleportation, and other photonic quantum technologies.

Bibliography

[1] Alain Aspect, Philippe Grangier, and Gérard Roger. "Experimental Realization of Einstein-Podolsky-Rosen-Bohm Gedankenexperiment: A New Violation of Bell's Inequalities". In: *Physical Review Letters* 49.2 (1982), pp. 91–94. DOI: 10.1103/PhysRevLett.49.91.

[2] Hiroo Azuma. "Generation of entangled photons with a second-order nonlinear photonic crystal and a beam splitter". In: *Journal of Physics D: Applied Physics* 55.31 (2022), p. 315106. DOI: 10.1088/1361-6463/ac6f2b. URL: https://dx.doi.org/10.1088/1361-6463/ac6f2b.

[3] Marcelo Santos Guimaraes, Itzhak Roditi, and Silvio Paolo Sorella. "Introduction to Bell's Inequality in Quantum Mechanics". In: *Universe* 10.10 (Oct. 2024), p. 396. ISSN: 2218-1997. DOI: 10.3390/universe10100396. URL: http://dx.doi.org/10.3390/universe10100396.

[4] Michael A. Nielsen and Isaac L. Chuang. *Quantum Computation and Quantum Information*. 10th Anniversary Edition. Cambridge University Press, 2010. ISBN: 9781107002173.

[5] Iman Esmaeil Zadeh et al. "Superconducting nanowire single-photon detectors: A perspective on evolution, state-of-the-art, future developments, and applications". In: *Applied Physics Letters* 118.19 (2021), p. 190502. DOI: 10.1063/5.0045990. URL: https://doi.org/10.1063/5.0045990.